Technical data sheet

Updated on 25/03/25

ETRI®

Serie 692CCP

Size	269 x 318 x 118 mm 10,59 x 12,51 x 4,64 "
Range	AC HIGH PERFORMANCES CENTRIFUGAL FAN

TECHNICAL DATA

Characteristics

- Weight: 4,75 Kg / 10,5 Lb
- Housing in Aluminium
- Turbine in plastic
- L-10 life expectancy at 40°C: 25.000 hours
- Operating temperature range: -10 / +70 °C
- Storage temperature: -54 / +85°C
- Connection: Leads
- IP40

Options

- Speed sensor
- Other IP levels
- Salt spray protection
- Shocks and vibrations protection
- Marine application
- Wide temperature range
- Other voltages
- Safety switch

ELECTRICAL AND AERAULIC DATA

Part Number	Voltage	Frequency	Nb Phases	Airflow		Pressure		Nominal speed	Noise level LP	Nominal current	Starting current	power	Capacitor
	V	Hz		l/s	CFM	mm H_2o	inch H_2o	RPM	dBA	A	A	W	µF
692CCP016DC13	220	50	3	38,00	80,56	64,00	2,52	2850	68	0,35	1,75	67,00	
	380	50	3	38,00	80,56	64,00	2,52	2850	68	0,20	1,00	67,00	
	220	60	3	44,00	93,28	90,00	3,54	3350	73	0,31	1,65	88,00	
	380	60	3	44,00	93,28	90,00	3,54	3350	73	0,18	0,95	88,00	
	220	50	1	38,00	80,56	64,00	2,52	2850	68	0,35	1,50	65,00	4,70
	380	50	1	38,00	80,56	64,00	2,52	2850	68	0,20	0,90	65,00	1,47
	220	60	1	44,00	93,28	90,00	3,54	3350	73	0,42	1,40	92,00	4,70
	380	60	1	44,00	93,28	90,00	3,54	3350	73	0,24	0,80	92,00	1,47
692CCP116DC13	220	50	3	38,00	80,56	64,00	2,52	2850	68	0,35	1,75	67,00	
	380	50	3	38,00	80,56	64,00	2,52	2850	68	0,20	1,00	67,00	
	220	60	3	44,00	93,28	90,00	3,54	3350	73	0,31	1,65	88,00	
	380	60	3	44,00	93,28	90,00	3,54	3350	73	0,18	0,95	88,00	
	220	50	1	38,00	80,56	64,00	2,52	2850	68	0,35	1,50	65,00	4,70
	380	50	1	38,00	80,56	64,00	2,52	2850	68	0,20	0,90	65,00	1,47
	220	60	1	44,00	93,28	90,00	3,54	3350	73	0,42	1,40	92,00	4,70
	380	60	1	44,00	93,28	90,00	3,54	3350	73	0,24	0,80	92,00	1,47

DRAWING AND AIRFLOW CURVE

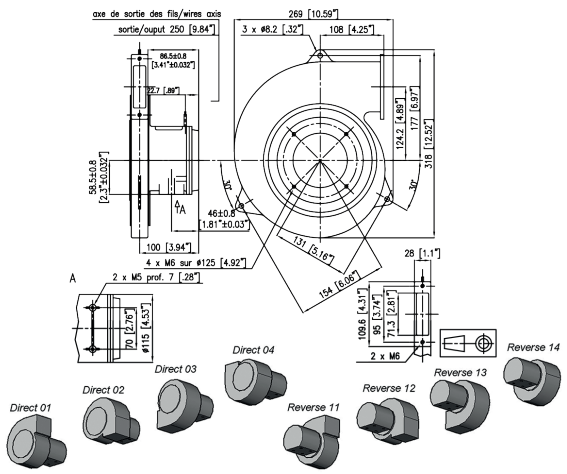

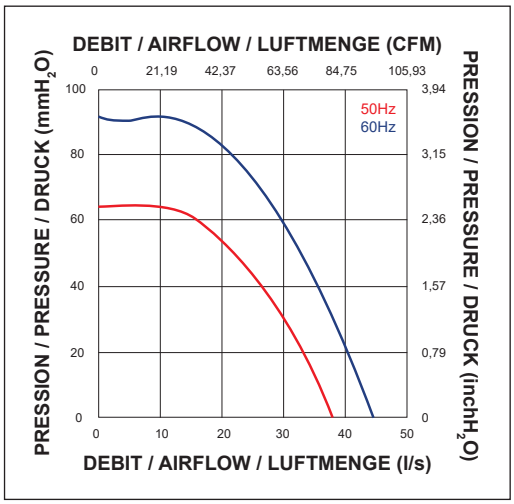

Non contractual document. All specifications are subject to change without prior notice. For professional use only. Please refer to the conditions of use of our catalogue.

ROSENBERG VENDOME SAS
Z.I. SUD | Rue Marc Seguin | BP60008 | F-41101| VENDOME Cedex Tel. +33 (0)2 54 23 14 54
RC BLOIS B 308 172 147 000 32
www.etrinet.com | info@etrinet.com